WMATA CONFIDENTIAL INFORMATION – DO NOT DISCLOSE WITHOUT EXPRESS WRITTEN APPROVAL OF THE GENERAL MANAGER OF THE AUTHORITY

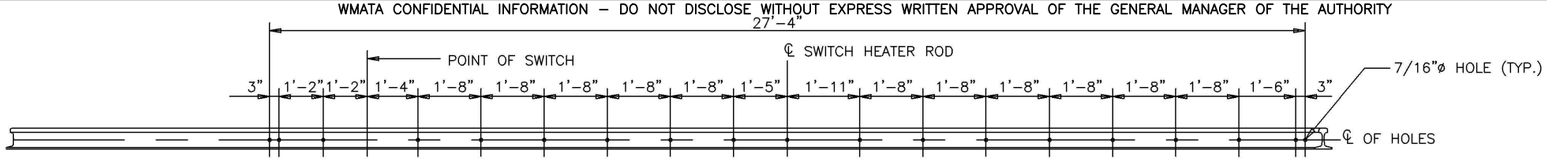

STOCK RAIL DRILLING FOR SWITCH HEATER ROD BRACKETS

SCALE: 1/2"=1'–0"

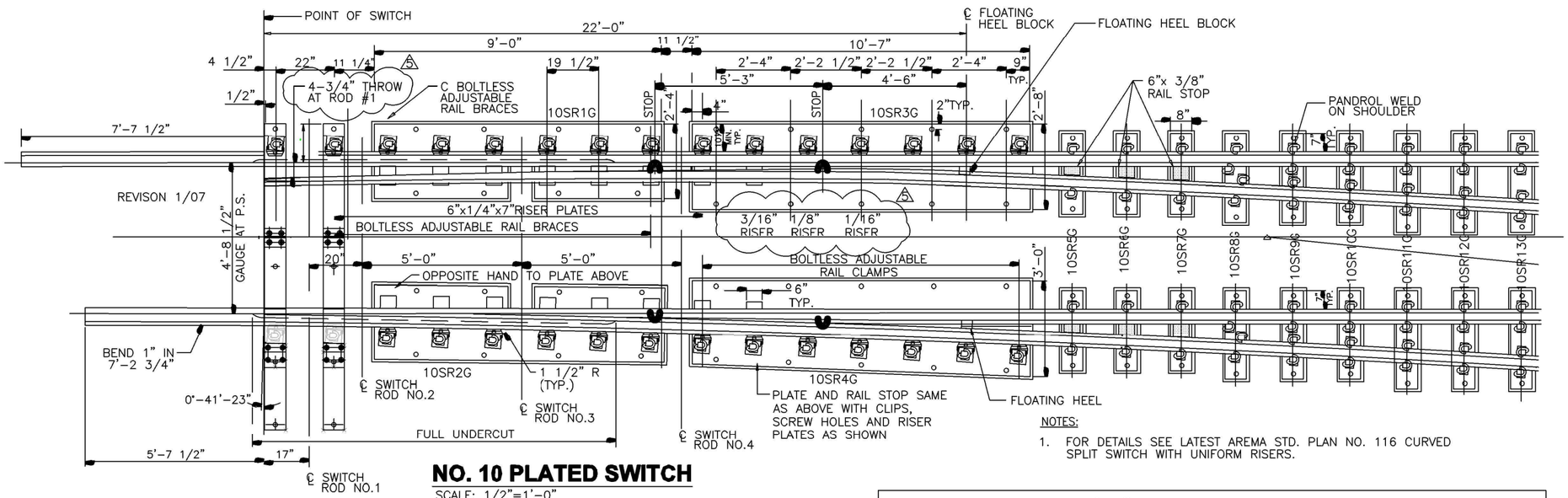

NOTES:

1. FOR DETAILS SEE LATEST AREMA STD. PLAN NO. 116 CURVED SPLIT SWITCH WITH UNIFORM RISERS.

NO. 10 PLATED SWITCH

SCALE: 1/2"=1'–0"

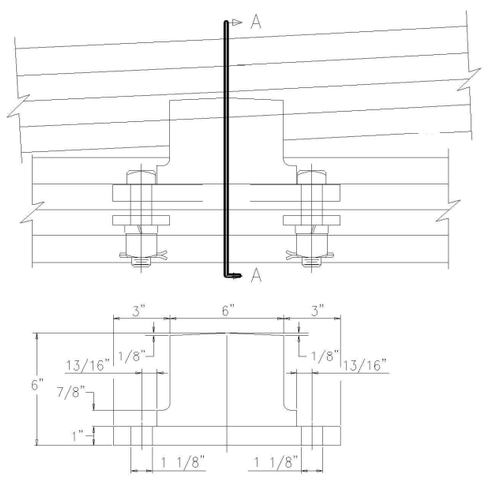

FLOATING HEEL BLOCK

SCALE: QUARTER SIZE

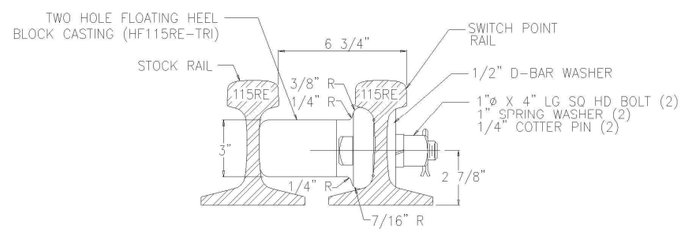

SECTION A–A

SCALE: QUARTER SIZE

22'–0" STRAIGHT SWITCH, COMPLETE	
BILL OF MATERIALS	
QTY.	DESCRIPTION – FURNISHED THIS CONTRACT
1 EA.	22'–0" SWITCH ON 35'–0" RAIL WITH FLOATING HEEL BLOCK (LEFT HAND CURVED AND RIGHT HAND STRAIGHT) COMPLETE WITH THICK WEB OR WITH REINFORCING BARS AND RAIL STOPS ATTACHED (POINT DETAIL 5100 PER LATEST AREMA STD. PLAN NO. 221) AND AS MODIFIED AS SHOWN
1	34'–8" STRAIGHT UNDERCUT STOCK RAIL
1	32'–6" BENT UNDERCUT STOCK RAIL
4	INSULATED VERTICAL SWITCH RODS (RACOR TYPE SMJ)
2	FLOATING HEEL BLOCK ASSEMBLY, COMPLETE
1	INSULATED GAUGE PLATE 10G1G COMPLETE WITH BOLTLESS ADJUSTABLE RAIL BRACES
1 EA.	10SR1G AND 10SR2G SPECIAL SWITCH PLATES COMPLETE WITH BOLTLESS ADJUSTABLE RAIL BRACES AND GRADUATED RISER PLATES
1 EA.	10SR3G AND 10SR4G SPECIAL SWITCH PLATES COMPLETE WITH BOLTLESS ADJUSTABLE RAIL CLAMPS
2 EA.	10SR5G THRU 10SR13G SPECIAL SWITCH PLATES COMPLETE WITH PANDROL WELD–ON SHOULDERS AND e2056 LEFT HAND SPRING CLIPS
A.R.	ELASTOMER PADS FOR EVERY PLATE
A.R.	10SR1G THRU 10SR15 AND SR15LG PLATES

PLATE DETAILS		
PLATE	LENGTH	WIDTH
✳ 10SR5LG	2'–7"	8"
✳ 10SR6LG	2'–7"	8"
✳ 10SR7LG	2'–7"	8"
10SR8LG	2'–10"	8"
10SR9LG	2'–10"	8"
10SR10LG	2'–10"	8"
10SR11LG	3'–1"	8"
10SR12LG	3'–1"	8"
10SR13LG	3'–1"	8"
✳ 10SR5RG	2'–7"	8"
✳ 10SR6RG	2'–7"	8"
✳ 10SR7RG	2'–7"	8"
10SR8RG	2'–10"	8"
10SR9RG	2'–10"	8"
10SR10RG	2'–10"	8"
10SR11RG	3'–1"	8"
10SR12RG	3'–1"	8"
10SR13RG	3'–1"	8"

✳ RAIL STOPS IN LIEU OF CENTER WELD–ON SHOULDERS

"PROFESSIONAL CERTIFICATION: I HEREBY CERTIFY THAT THESE DOCUMENTS WERE PREPARED OR APPROVED BY ME, AND THAT I AM A DULY LICENSED ARCHITECT UNDER THE LAWS OF THE DISTRICT OF COLUMBIA."

LICENSE No. .

EXPIRATION DATE: .

- DC REGISTER SECTION 3413

DESIGNED . DATE .

DRAWN . DATE .

CHECKED RAVI AMIN DATE 01/15

REFERENCE DRAWINGS

NUMBER	TITLE

REVISIONS

DATE	NUM	DESCRIPTION
07/06	01	Edit to Notes and Revise Stock Rail Drillings
08/06	02	Stock Rail Drilling Hole from 7/8" to 7/16"
01/07	03	Revised Plate 10G1G Holes to Reflect DF
09/07	04	Revised Gauge Plate
06/13	05	Revised Riser Plates
06/13	06	Revised Throw at Rod
01/15	07	Revised Title Block and Changed DD to read ST

WASHINGTON METROPOLITAN AREA TRANSIT AUTHORITY

DEPARTMENT OF TRANSIT INFRASTRUCTURE AND ENGINEERING SERVICES
CENI - TRACK STRUCTURES & FACILITIES

REVISION SUBMITTED DATE

APPROVED THOMAS ROBINSON DATE
DEPUTY CHIEF ENGINEER

TRACKWORK STANDARD DRAWING
NO. 10 TURNOUT, PLATED SWITCH,
DIRECT FIXATION TRACK
.

CONTRACT NO.	SCALE	DRAWING NO.	SHEET NO.
FQ-	AS SHOWN	ST-TW-050	## of .